Suffolk Construction Company, Inc.
65 Allerton Street
Boston, Massachusetts 02119
P: (617) 445-3500
F: (617) 541-2128

Project: 226052 DFCI-BIDMC New Cancer Hospital - 1 Joslin Place - Construction
1 Joslin Place
Boston, Massachusetts 02215

RFI #0-PB-127: Tieback Anchor Material Clarification

Revision	0	**Status**	Closed on 03/09/26
To	Mollica Manandhar (Payette Associates, Inc. (BOSTON)) Jensen Ying (Payette Associates, Inc. (BOSTON)) Emilio Cardarelli (PAYETTE) Hyunsuk Yun (Payette Associates, Inc. (BOSTON)) Jeff Abramson (Payette Associates, Inc. (BOSTON)) Jessica Hoctor (Payette Associates, Inc. (BOSTON))	**From**	JP Connors (Suffolk Construction) 65 Allerton St. Boston, Massachusetts 02119
Date Initiated	Mar 3, 2026	**Due Date**	Mar 10, 2026
Location		**Project Stage**	Bidding
Cost Impact	TBD	**Schedule Impact**	TBD
Spec Section	051200 - STRUCTURAL STEEL FRAMING	**Cost Code**	
Drawing Number	QM-701	**Reference**	
Linked Drawings			
Received From	Devin DiManno (Suffolk Construction)	**Sub Job**	
Copies To	Elisa Arriaga (Vanasse Hangen Brustlin, Inc. (BOSTON)), Craig Blanchet (Lemessurier Consultants, Inc. (BOSTON)), Joy Clark (Leggat McCall Properties LLC), JP Connors (Suffolk Construction), Nathan Crowley (Suffolk Construction), Emil Giordano (Suffolk Construction), Kevin Griffin (Leggat McCall Properties LLC), Benjamin Hedges (Suffolk Construction), Emily Jacobsen (Lemessurier Consultants, Inc. (BOSTON)), Avinash Jadhav (Lemessurier Consultants, Inc. (BOSTON)), Silas Mackey (Suffolk Construction), Mithila Madhavan (Lemessurier Consultants, Inc. (BOSTON)), Kevin Malenchini (Suffolk Construction), Rick Medeiros (Suffolk Construction), Rob Morsi (Suffolk Construction), Steve Mulligan (St. Onge Company (YORK)), Christopher O'Neil (Suffolk Construction), Kaitlyn Palmer (Lemessurier Consultants, Inc. (BOSTON)), Joel Perry (Suffolk Construction), Kyle Reilly (Suffolk Construction), Henry Sniezek (Suffolk Construction) , Ben Stanton (Leggat McCall Properties LLC), Dan Sullivan (Leggat McCall Properties LLC), Sabrina Torchia (Suffolk Construction), Bob Walsh (Leggat McCall Properties LLC), Benjamin Watkins (Suffolk Construction)		

ADDITIONAL FIELDS

Required Reviewers		**Urgency**	Medium

Activity

Question

Question from JP Connors Suffolk Construction *on Tuesday, Mar 3, 2026 at 07:19 AM EST*

Please reference Detail 3/Drawing QM-701 dated 2/5/26, the attached markup, and the Lerch Bates Facade Access Basis of Design Narrative dated 10/31/25.

The above-referenced detail calls for the tieback anchors to be hot dip galvanized whereas the BOD Narrative calls for all materials to be stainless steel.

Please review and confirm the tieback anchors can be hot dip galvanized since there is a ROM cost impact for stainless steel anchors of ~$150,000.00.

Attachments
RFI-0-PB-127_Tieback Anchor Material Clarification.pdf

Official Response

Response from Jensen Ying Payette Associates, Inc. (BOSTON) *on Monday, Mar 9, 2026 at 03:25 PM EDT*

Please see attached for Payette's response.

Attachments
RFI-0-PB-127_Tieback Anchor Material Clarification - PAI.pdf

All Replies

Response from JP Connors Suffolk Construction *on Monday, Mar 9, 2026 at 03:53 PM EDT*

Payette Response (3/9/26): 11 81 23, 2.3 K refers to non-structural hardware. Tieback anchors are structural assemblies. Tieback anchors can be hot dip galvanized.
JYING

Response from Jensen Ying Payette Associates, Inc. (BOSTON) *on Monday, Mar 9, 2026 at 03:25 PM EDT*

Please see attached for Payette's response.

Attachments
RFI-0-PB-127_Tieback Anchor Material Clarification - PAI.pdf

SCCI: Drawing QM-701 calls for material to be hot dip galvanized

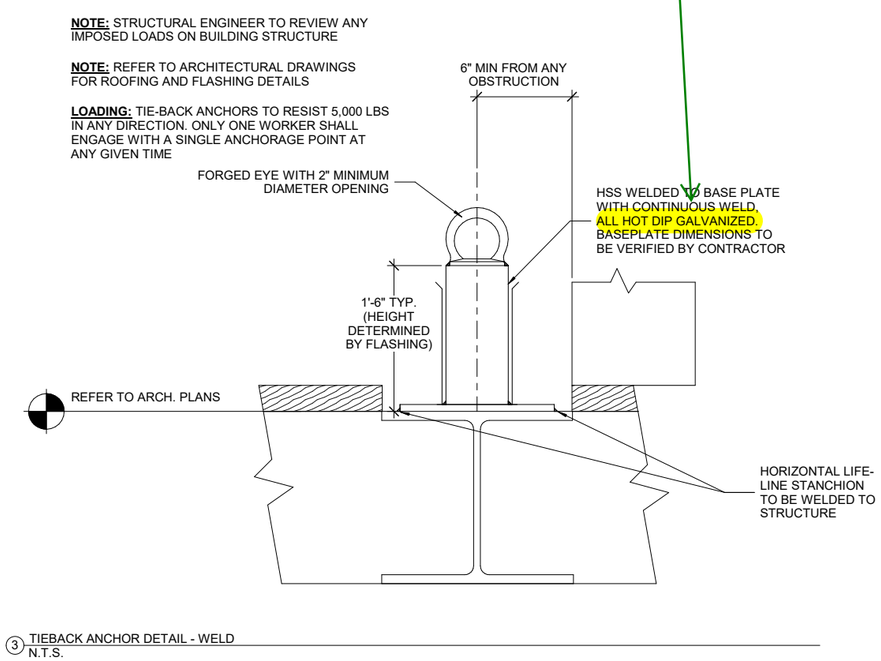

Reference Drawing QM-701

K. Non-structural hardware shall be made of stainless steel.

L. Hollow Structural Sections (HSS) that are permanently fixed to the building structure and subject to collecting water (such as davit pedestals) shall be foam filled.

M. System design shall be qualified by the Manufacturer with three (3) working examples that have been commissioned. Architect will evaluate products and may disqualify based upon findings.

2.4 DAVIT ARMS – PORTABLE

A. Constructed out of aluminum extruded sections of engineered length and size to suit application.

FAÇADE ACCESS EQUIPMENT **118123-5**
FAÇADE AND INFRASTRUCTURE PACKAGE ADDENDUM 02 **02/05/26**

Reference Addendum 2 Specification 11 81 23 Paragraph 2.3 K dated 2/5/26

B. Tieback Anchors
1. Supply quantity of anchor posts and related components as needed to provide fall protection and suspension points for abseiling.
2. Anchors shall be designed for minimum 5000 lbs. ultimate load.
3. Anchor assembly to be permanently attached to building structure.
4. Minimum eye opening of 2” diameter with rounded edges to prevent rope abrasion.
5. Anchor layout must meet requirements of ASME A120.1 and IWCA I-14.
6. Support post height to be a minimum 8” above waterproofed surface or as required for waterproofing.
7. Connection to structure including embed requirements must be coordinated with the Architect and Construction Manager.

Reference Addendum 2 Specification 11 81 23 Paragraph 2.9 B dated 2/5/26

SCCI Question: Please clarify the material for tieback anchors. Detail 3/QM-701 calls for hot dip galvanized. Lerch Bates Basis of Design Narrative dated 10/31/25 calls for stainless steel.

SUFFOLK	Sketch: **RFI 0-PB-127**
Project: **DFCI-BIDMC New Cancer Hospital**	Date: 03/03/26
Title: **Tieback Anchor Material Clarification**	Scale: NTS

Suffolk Construction Company, Inc.
65 Allerton Street
Boston, Massachusetts 02119
P: (617) 445-3500
F: (617) 541-2128

Project: 226052 DFCI-BIDMC New Cancer Hospital - 1 Joslin Place - Construction
1 Joslin Place
Boston, Massachusetts 02215

RFI #0-PB-127: Tieback Anchor Material Clarification

Revision	0	**Status**	Open
To	Emilio Cardarelli (PAYETTE) Hyunsuk Yun (Payette Associates, Inc. (BOSTON)) Jeff Abramson (Payette Associates, Inc. (BOSTON)) Jensen Ying (Payette Associates, Inc. (BOSTON)) Jessica Hoctor (Payette Associates, Inc. (BOSTON)) Mollica Manandhar (Payette Associates, Inc. (BOSTON))	**From**	Johnpatrick Connors (Suffolk Construction) 65 Allerton St. Boston, Massachusetts 02119
Date Initiated	Mar 3, 2026	**Due Date**	Mar 10, 2026
Location		**Project Stage**	Bidding
Cost Impact	TBD	**Schedule Impact**	TBD
Spec Section	051200 - STRUCTURAL STEEL FRAMING	**Cost Code**	
Drawing Number	QM-701	**Reference**	
Linked Drawings			
Received From	Devin DiManno (Suffolk Construction)	**Sub Job**	
Copies To	Elisa Arriaga (Vanasse Hangen Brustlin, Inc. (BOSTON)), Craig Blanchet (Lemessurier Consultants, Inc. (BOSTON)), Joy Clark (Leggat McCall Properties LLC), Johnpatrick Connors (Suffolk Construction), Nathan Crowley (Suffolk Construction), Emil Giordano (Suffolk Construction), Kevin Griffin (Leggat McCall Properties LLC), Benjamin Hedges (Suffolk Construction), Emily Jacobsen (Lemessurier Consultants, Inc. (BOSTON)), Avinash Jadhav (Lemessurier Consultants, Inc. (BOSTON)), Silas Mackey (Suffolk Construction), Mithila Madhavan (Lemessurier Consultants, Inc. (BOSTON)), Kevin Malenchini (Suffolk Construction), Rick Medeiros (Suffolk Construction), Rob Morsi (Suffolk Construction), Steve Mulligan (St. Onge Company (YORK)), Christopher O'Neil (Suffolk Construction), Kaitlyn Palmer (Lemessurier Consultants, Inc. (BOSTON)), Joel Perry (Suffolk Construction), Kyle Reilly (Suffolk Construction), Henry Sniezek (Suffolk Construction) , Ben Stanton (Leggat McCall Properties LLC), Dan Sullivan (Leggat McCall Properties LLC), Sabrina Torchia (Suffolk Construction), Bob Walsh (Leggat McCall Properties LLC), Benjamin Watkins (Suffolk Construction)		

ADDITIONAL FIELDS

Required Reviewers		**Urgency**	Medium

Activity

Question

Question from Johnpatrick Connors Suffolk Construction *on Tuesday, Mar 3, 2026 at 07:19 AM EST*

Please reference Detail 3/Drawing QM-701 dated 2/5/26, the attached markup, and the Lerch Bates Facade Access Basis of Design Narrative dated 10/31/25.

The above-referenced detail calls for the tieback anchors to be hot dip galvanized whereas the BOD Narrative calls for all materials to be stainless steel.

Please review and confirm the tieback anchors can be hot dip galvanized since there is a ROM cost impact for stainless steel anchors of ~$150,000.00.

Attachments
RFI-0-PB-127_Tieback Anchor Material Clarification.pdf

PAYETTE RESPONSE (3/9/2026)

11 81 23, 2.3 K refers to non-structural hardware. Tieback anchors are structural assemblies. Tieback anchors can be hot dip galvanized.

JYING

SCCI: Drawing QM-701 calls for material to be hot dip galvanized

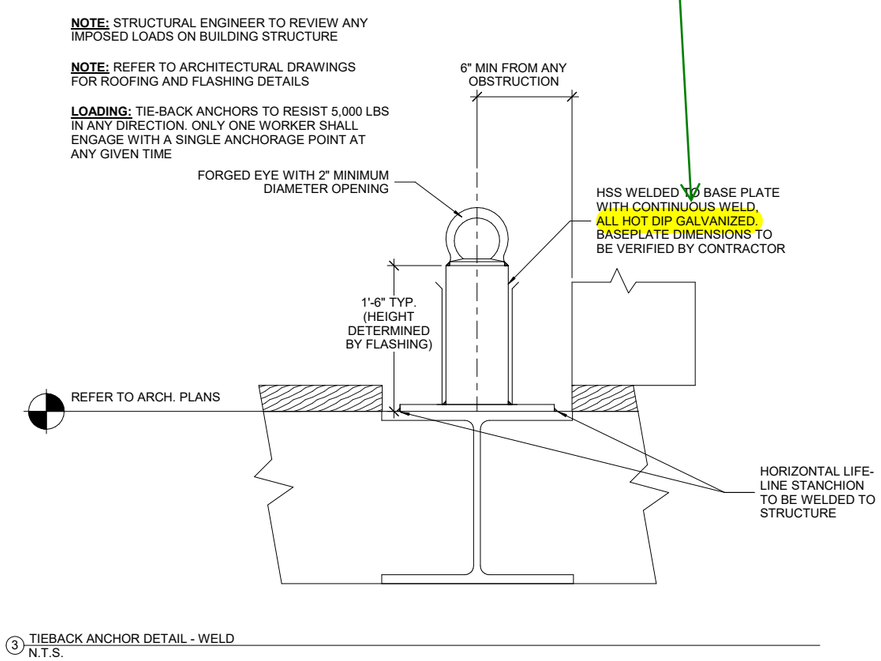

Reference Drawing QM-701

K. Non-structural hardware shall be made of stainless steel.

L. Hollow Structural Sections (HSS) that are permanently fixed to the building structure and subject to collecting water (such as davit pedestals) shall be foam filled.

M. System design shall be qualified by the Manufacturer with three (3) working examples that have been commissioned. Architect will evaluate products and may disqualify based upon findings.

2.4 DAVIT ARMS – PORTABLE

A. Constructed out of aluminum extruded sections of engineered length and size to suit application.

FAÇADE ACCESS EQUIPMENT **118123-5**
FAÇADE AND INFRASTRUCTURE PACKAGE ADDENDUM 02 **02/05/26**

Reference Addendum 2 Specification 11 81 23 Paragraph 2.3 K dated 2/5/26

B. Tieback Anchors
1. Supply quantity of anchor posts and related components as needed to provide fall protection and suspension points for abseiling.
2. Anchors shall be designed for minimum 5000 lbs. ultimate load.
3. Anchor assembly to be permanently attached to building structure.
4. Minimum eye opening of 2” diameter with rounded edges to prevent rope abrasion.
5. Anchor layout must meet requirements of ASME A120.1 and IWCA I-14.
6. Support post height to be a minimum 8” above waterproofed surface or as required for waterproofing.
7. Connection to structure including embed requirements must be coordinated with the Architect and Construction Manager.

Reference Addendum 2 Specification 11 81 23 Paragraph 2.9 B dated 2/5/26

SCCI Question: Please clarify the material for tieback anchors. Detail 3/QM-701 calls for hot dip galvanized. Lerch Bates Basis of Design Narrative dated 10/31/25 calls for stainless steel.

SUFFOLK	Sketch: **RFI 0-PB-127**
Project: **DFCI-BIDMC New Cancer Hospital**	Date: 03/03/26
Title: **Tieback Anchor Material Clarification**	Scale: NTS